IF5760

Inductive sensor

IFA2004-FRKG/V4A/US-100-IRF RT

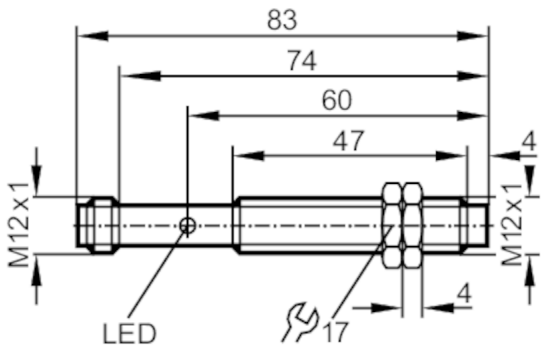

Product characteristics		
Electrical design		PNP/NPN
Output function		normally open / closed; (selectable)
Sensing range	[mm]	4
Housing		Threaded type
Dimensions	[mm]	M12 x 1 / L = 83
Application		
System		gold-plated contacts
Electrical data		
Operating voltage	[V]	10...55 DC
Protection class		II
Reverse polarity protection		yes
Outputs		
Electrical design		PNP/NPN
Output function		normally open / closed; (selectable)
Max. voltage drop switching output DC	[V]	4.6
Minimum load current	[mA]	4
Max. leakage current	[mA]	0.5
Permanent current rating of switching output DC	[mA]	300
Switching frequency DC	[Hz]	1500
Short-circuit protection		yes
Type of short-circuit protection		yes (non-latching)
Overload protection		yes
Monitoring range		
Sensing range	[mm]	4
Real sensing range Sr	[mm]	4 ± 10 %
Operating distance	[mm]	0...3.25

IF5760

Inductive sensor

IFA2004-FRKG/V4A/US-100-IRF RT

Accuracy / deviations			
Correction factor		steel: 1 / stainless steel: 0.7 / brass: 0.4 / aluminum: 0.3 / copper: 0.2	
Hysteresis	[% of Sr]	1...15	
Switch-point drift	[% of Sr]	-10...10	
Operating conditions			
Ambient temperature	[°C]	-25...80	
Protection		IP 67	
Tests / approvals			
EMC		EN 60947-5-2	
		EN 55011	class B
MTTF	[years]	1815	
UL approval		Ta	0...40 °C
		Enclosure type	Type 1
		voltage supply	Hazardous voltage
		File number UL	E174191
Mechanical data			
Weight	[g]	34.6	
Housing		Threaded type	
Mounting		non-flush mountable	
Dimensions	[mm]	M12 x 1 / L = 83	
Thread designation		M12 x 1	
Material		stainless steel (1.4571/316Ti); sensing face: PBT	
Displays / operating elements			
Display		Switching status	1 x LED, red
Accessories			
Items supplied		lock nuts: 2	
Remarks			
Pack quantity		1 pcs.	

Electrical connection - plug

Connector: 1 x M12; coding: A; Contacts: gold-plated

IF5760

Inductive sensor
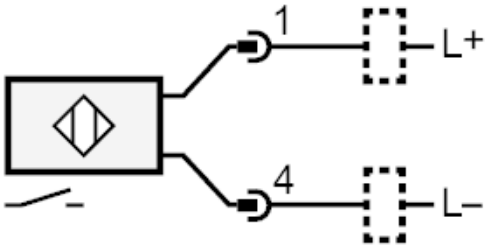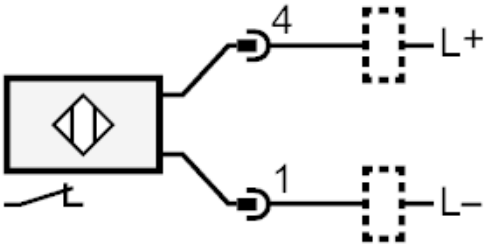
IFA2004-FRKG/V4A/US-100-IRF RT